Series and Parallel Circuits

Mr. Dobson
SNC1W

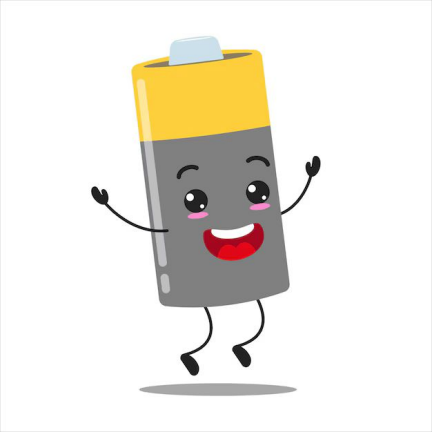

Today’s Agenda

- Human Circuit
- Series and Parallel Circuit PEOEs
- Investigation in Trios
- Exit Tickets

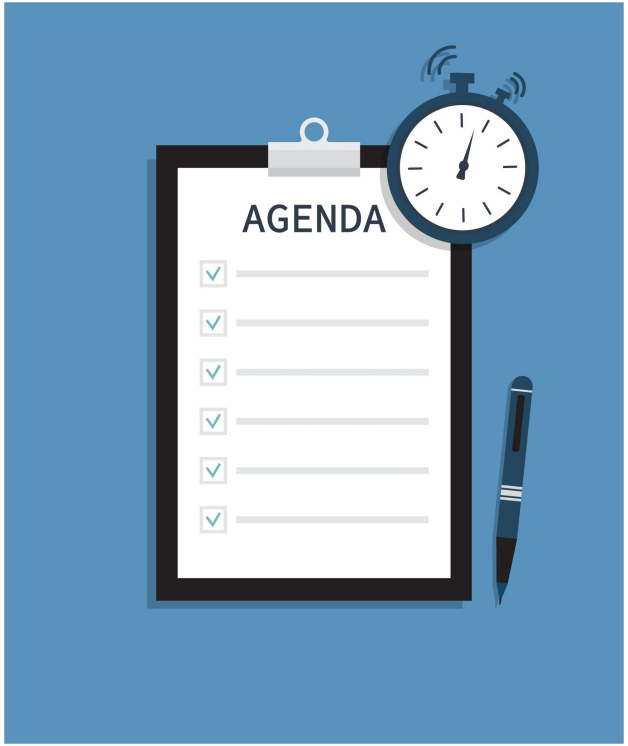

Learning Goals

- ➔ Today we are learning to identify series and parallel circuits and to explain and compare bulb brightness in each using current, voltage, and resistance

Success Criteria

- ➔ I can look at a diagram or pre-built circuit and tell whether it is series or parallel, pointing to where the path stays single or where branches split and rejoin
- ➔ I can predict and compare the brightness of bulbs in series and parallel
- ➔ I can show my reasoning with a labelled sketch and one piece of evidence from today’s activity.

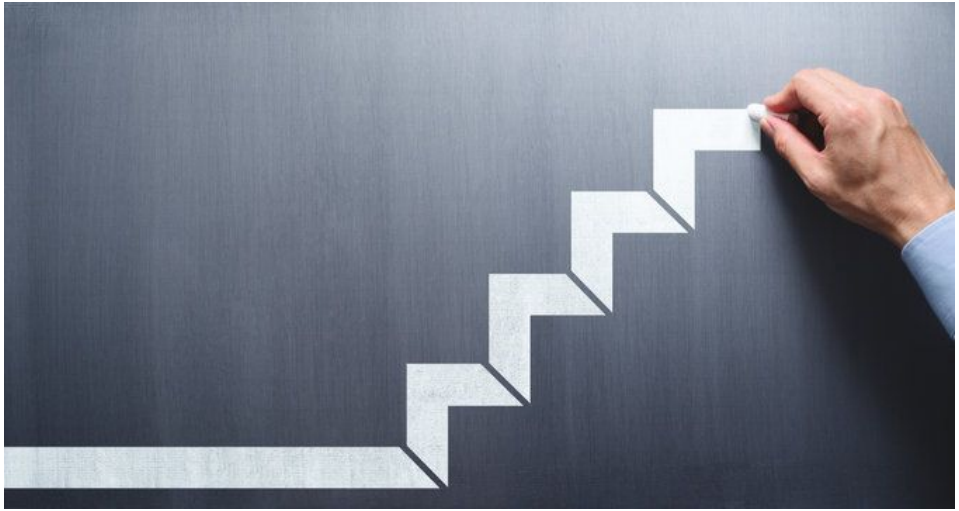

Reminder / Key words

- Path, Branch, Node
- Current, Voltage, Resistance
- Brightness as energy per time at the bulb

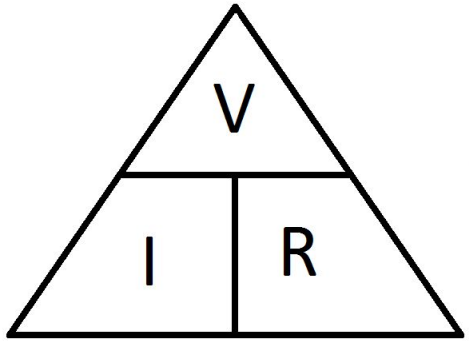

$I = V/R$

$V = IR$

$R = V/I$

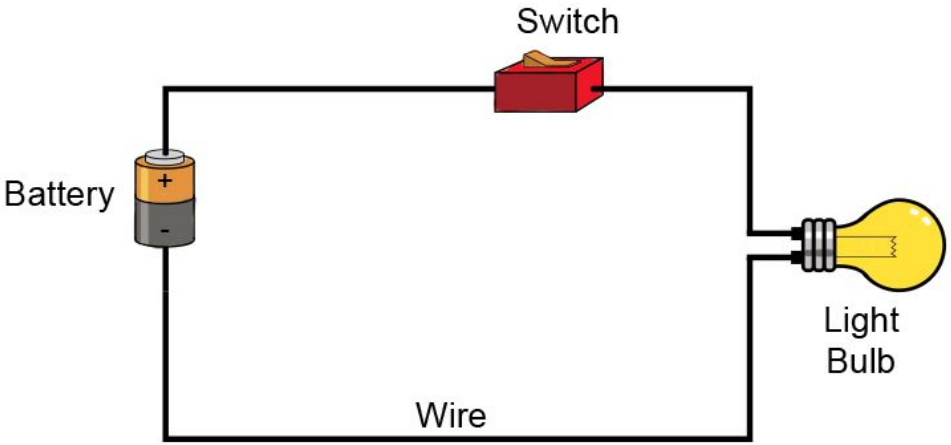

Human Circuit

- We will model series and parallel with tokens
- Tokens move one way and pass hand to hand
- At a bulb drop one token in, take one out, and keep the flow moving

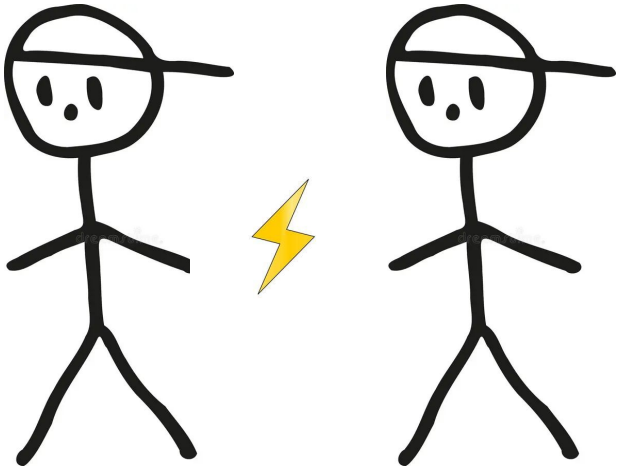

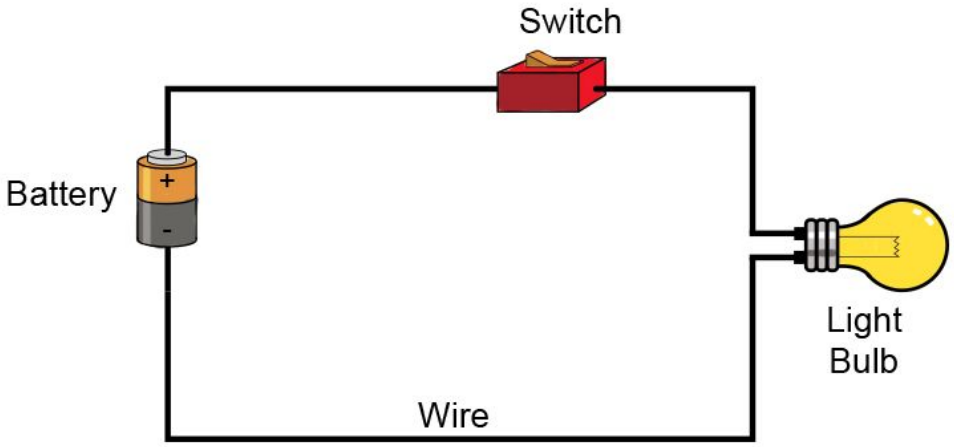

Where to Stand

- Toes on the tape and face the arrows
- Keep arm’s-length spacing
- Meter Recorders count only during the timer

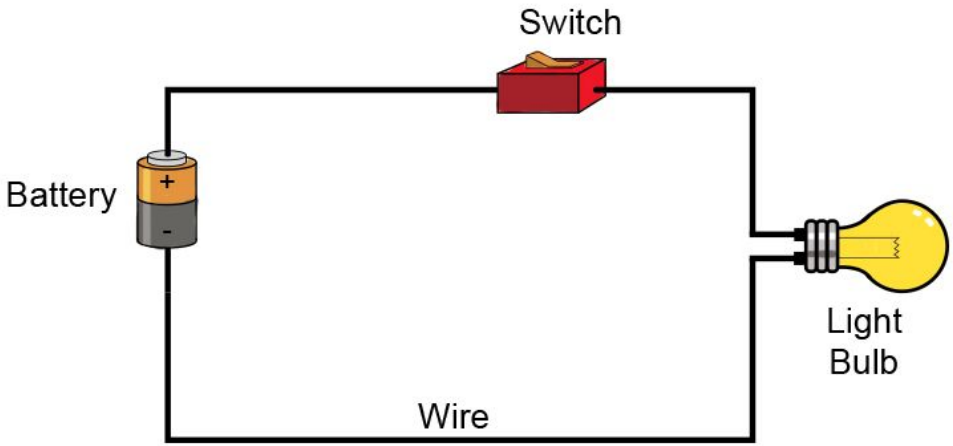

Roles

- Battery and Switch
- Bulb A and Bulb B
- Wire Carriers
- Meter Recorders

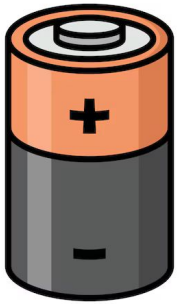

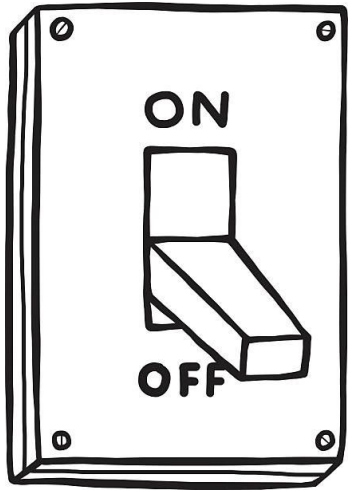

Prediction - series

- In this **one-path** circuit, compared to a single bulb, will **each bulb** be **brighter, the same,** or **dimmer**? **Write one reason.**

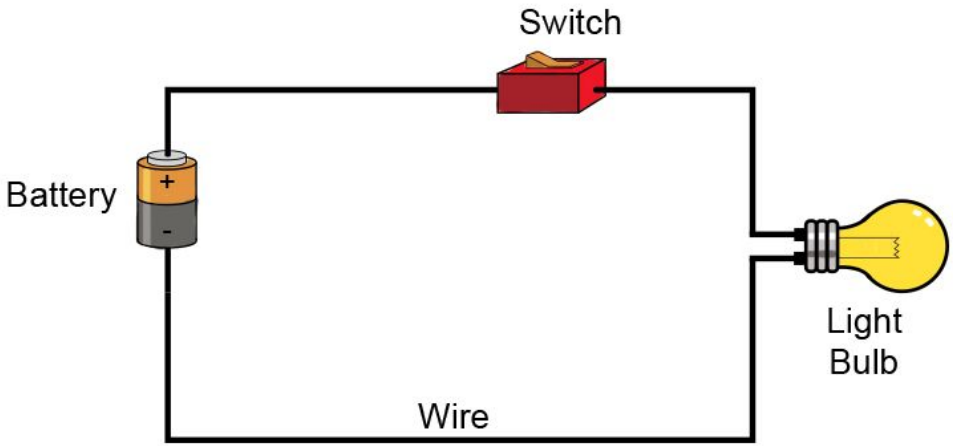

Series Observe and Debrief

- Run, count, stop
- Result… Fewer tokens per bulb than single

WHY

Parallel predict

- Two branch circuit
- Compared to a single bulb, each bulb will be: brighter, the same, or dimmer
- **Respond with fingers:** 1 = brighter, 2 = same, 3 = dimmer

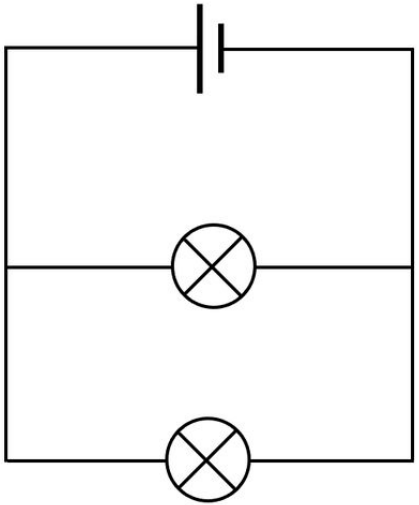

Parallel Observe and Debrief

- Run, count, stop
- What do we notice for each of the bulbs?

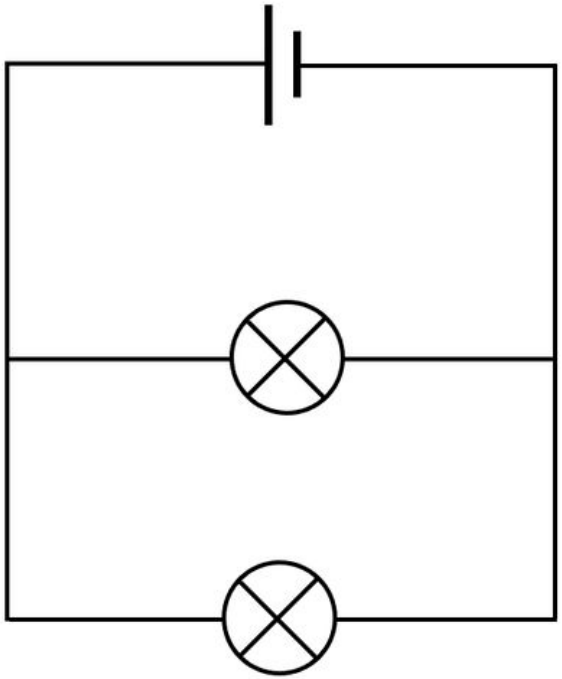

Anchor Ideas

- Series has one path. Current is the same through each device
- Parallel has branches. Currents split and then add
- Brightness in the model is tokens per unit time at the bulb

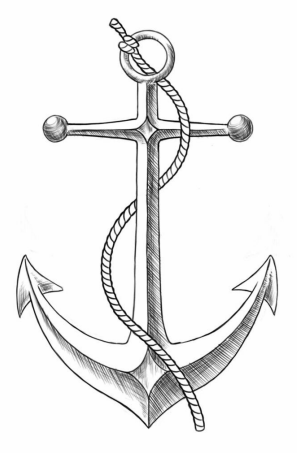

Overview (Trios)

- Work in trios at your table
- Use Circuit A and Circuit B. Do not rewire
- Complete the Investigation Log with short sketches and short sentences

PEOE - Series

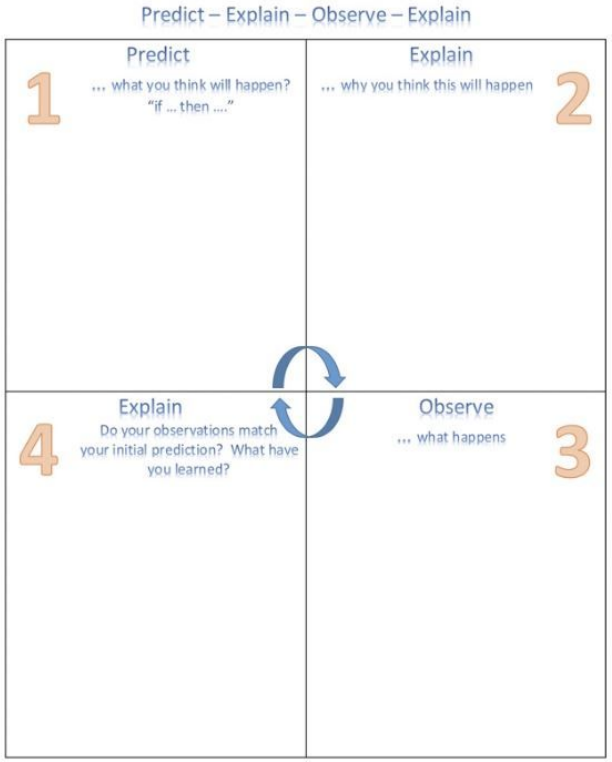

Adapted from smarterscience.youthscience.ca

In this one-path circuit, compared to a single bulb, will each bulb be **brighter, the same, or dimmer**

Be ready to explain **why** using path, resistance, and current

Series Circuit

A series circuit has **one continuous path.**

The **same current** passes through every device

Total resistance adds: Rtotal = R1 + R2

Source voltage is shared: Vsource = V1 + V2

Add a bulb in series → total resistance increases → current decreases → bulbs are dimmer.

Quick test: break one bulb and the whole circuit stops

PEOE - Parallel

In this two-branch circuit, compared to a single bulb, will each bulb be **brighter, the same,** or **dimmer**

What happens to the **total current** of the whole circuit

Be ready to explain using **nodes** and **branches**

Contrast chart

Feature	**Series**	**Parallel**
Paths	?	?
Current	?	?
Voltage at a bulb	?	?
Brightness vs single	?	?

Series and Parallel Circuits Worksheet

Name: Date:

Group members:

Part A - Series (Board A)

A1. Sketch and trace the path
Start at + on the source. Draw a line through Switch → Bulb 1 → Bulb 2 → −.
Add arrows along the line to show direction. There are no splits.

A2. Quick prediction (circle each)
Bulb 1: ☐ brighter ☐ same ☐ dimmer
Bulb 2: ☐ brighter ☐ same ☐ dimmer

Reasoning:

A3. Observation
What you saw with the switch closed.

A4. Explain
Write **two sentences** that explain your result.

Part B - Parallel (Board B)

B1. Sketch branches and nodes
Draw two rails. Label the source terminals A (+) and B (−).
Mark one split and one merge. Draw a bulb on the top branch and a bulb on the bottom branch from A to B. Add arrows on both branches.

B2. Predict
Each bulb compared to a single bulb. Circle one for each.
Bulb 1: ☐ brighter ☐ same ☐ dimmer
Bulb 2: ☐ brighter ☐ same ☐ dimmer
Total current for the whole circuit: ☐ increases ☐ same ☐ decreases
Reason in one short sentence:

B3. Observe
What you saw with the switch closed. One short sentence

B4. Explain in words
Write two or three short sentences.

1. Say that both branches connect to the same two nodes A and B and what that means for voltage at each bulb
2. Say what happens to total current when you add branches.
3. Link this to brightness for the two bulbs.

Rank and justify (*refer to C1, C2, C3 on the whiteboard)*
Order the starred bulbs from brightest to dimmest. If two are tied, write a tie.

Order: _____>_____>_____>

Reason for C1 in one line:

Reason for C2 in one line:

Reason for C3 in one line:

SNC1W Exit Card - Series and Parallel Circuits

Name: Date:

Directions
Work on your own. Use small diagrams, arrows, and labels, do not return to the circuits.

A. Diagrams and claim

1. Draw a small series circuit with two identical bulbs and a 3V source

2. Draw a small parallel circuit with two identical bulbs and a 3V source

3. Circle the which one of the following keeps one bulb as bright as a single-bulb circuit: Series / parallel

4. Write one line that links the structure of the circuit to the brightness of the bulb. Use any of the following words: path, branches, nodes, current, voltage, brightness

5. Traffic light self check:

Identify series vs parallel from a sketch:

Teacher use
Communication [level 1-4]: Independent work [E G S N]: